Forward/Backward Pass Method

The CPM has two concepts of **Early Event Time (ET)** which is **forward pass** that determines the earliest occurrence times of the events and **Late Event Time (LT)** which is **backward pass** for an event which calculates their latest occurrence times.
يحتوي ال CPM على مفهومين لوقت الحدث المبكر (ET) وهو التمرير الأمامي الذي يحدد أوقات حدوث الأحداث المبكرة ووقت الحدث المتأخر (LT) وهو التمرير الخلفي لحدث يحسب أوقات حدوثه الأخيرة.

Earliest Start Time وقت البدأ المبكر

Definition1: The early event time (forward pass) for node *i*, represented ET(*i*), is the earliest time at which the event corresponding to node *i* can occur.
We compute ET(*i*) as follows:
تعريف 1: وقت الحدث المبكر (تمرير إلى الأمام) للعقدة i ، الممثلة لل ET (i) ، هو أقرب وقت يمكن أن يحدث فيه الحدث المقابل للعقدة i .

1- Find each prior event (**immediate predecessor**) to node *i* that is connected by an arc to node *i*.
ابحث عن كل حدث سابق (سلف مباشر) للعقدة i المتصلة بواسطة سهم إلى العقدة i

2- To the ET for each immediate predecessor of node *i*, add the duration of the activity connecting the immediate predecessor to node *i*. Note that, first event of the diagram has no prior events going into it. So set **Et(1)=0.**
لل ET لكل حدث سابق للعقدة i ، أضف مدة النشاط الذي يربط السلف السابق بالعقدة i .لاحظ أن الحدث الأول من الرسم البياني لا يحتوي على أحداث سابقة تدخل فيه .لذلك اضبط Et (1) = 0.

3- ET(*i*) equals the **<u>maximum</u>** of the **<u>sums</u>** computed in step 2.
ET (i) يساوي الحد الأعلى للمجموع المحسوب في الخطوة 2.

Example1: For example, 2 in the previous lecture compute the ET(*i*)'s.

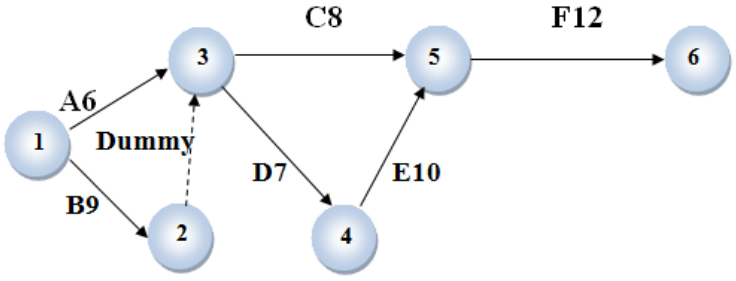

Solution:
ET(1) = 0
ET(2) = ET(1) + 9 = 0 + 9 = 9

$$ET(3) = \max\begin{cases} ET(1) + 6 = 0 + 6 = 6 \\ ET(2) + 0 = 9 + 0 = 9 \end{cases} = 9$$

ET(4) = ET(3) + 7 = 9 + 7 = 16

$$ET(5) = \max\begin{cases} ET(3) + 8 = 9 + 8 = 17 \\ ET(4) + 10 = 16 + 10 = 26 \end{cases} = 26$$

ET(6) = ET(5) + 12 = 26 + 12 = 38.

Latest Completion Time وقت الانتهاء المتاخر

Definition2: The late event time (backward pass) for node *i*, represented LT(*i*), is the latest time at which the event corresponding to node *i* can occur without delaying the completion of the project.
We compute LT(*i*) as follows:
تعريف 2: وقت الحدث المتأخر (تمرير للخلف) للعقدة i ، ممثلة LT (i) ، هو آخر وقت يمكن أن يحدث فيه الحدث المقابل للعقدة i دون تأخير استكمال المشروع. نحسب LT (i) على النحو التالي

1- Find each node that occurs after node *i* and is connected to node *i* by an arc. These events are the (**immediate predecessors**) of node *i*.
2- From the ET for each immediate predecessor of node *i*, subtract the duration of the activity joining successor to node *i*.
3- LT(*i*) is the **<u>smallest</u>** of the **<u>differences</u>** computed in step 2.

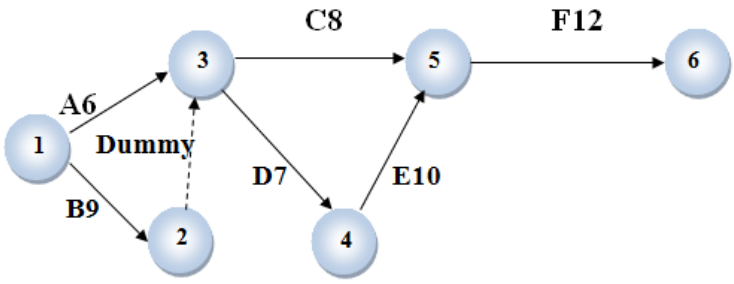

Find the LT(*i*)'s for the example?
Solution:
$LT(6) = 38$

$$LT(5) = ET(6) - 12 = 38 - 12 = 26$$

$$LT(4) = ET(5) - 10 = 26 - 10 = 16$$

$$LT(3) = \min \begin{cases} LT(4) - 7 = 16 - 7 = 9 \\ LT(5) - 8 = 26 - 8 = 18 \end{cases} = 9$$

LT(2) = LT(3) - 0 = 9

$$LT(1) = \min \begin{cases} LT(3) - 6 = 9 - 6 = 3 \\ LT(2) - 9 = 9 - 9 = 0 \end{cases} = 0$$

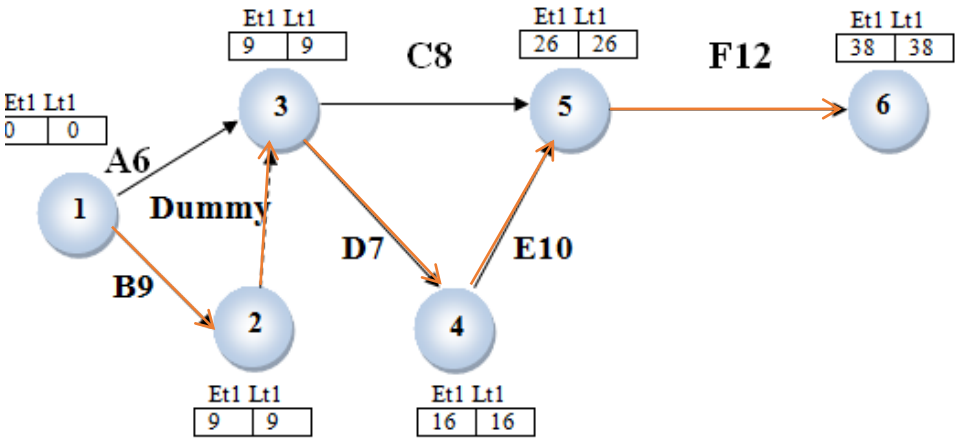

لاحظ لكل العقد LT(i) = ET(i) .
احسب المسار الحرج ؟

Note:
1- If LT(i) = ET(i), any delay in the occurrence of node *i* will delay the completion of the project. For example, since LT(4) = ET(4), any delay in occurrence of node 4 will delay the completion of the project.

2-Based on the preceding calculations, an activity (i, j) will be critical if LT(i) = ET(i)

Float Time

Spare time is known as a float time and is important because it may be useful to know how much time a task can be delayed without having an impact on the whole process. Float refers to the amount of time by which a particular event or an activity can be delayed without affecting the time schedule of the network.

يُعرف الوقت الاضافي باسم وقت العائم وهو مهم لأنه قد يكون من المفيد معرفة مقدار الوقت الذي يمكن أن تتأخر فيه المهمة دون التأثير على العملية بأكملها .يشير الوقت الاضافي إلى مقدار الوقت الذي يمكن أن يتأخر فيه حدث معين أو نشاط معين دون التأثير على الجدول الزمني لشبكة الاعمال.

There are three main:

1- Total Float
2- Free Float
3- Independent Float

Total Float (**TF**)**:** Total float of an activity is the amount by which the duration of the activity can be increased without delaying the completion of the project.

التعويم الكلي :(TF) التعويم الكلي لنشاط هو الكمية التي يمكن من خلالها زيادة مدة النشاط دون تأخير استكمال المشروع

Let t_{ij} be the duration of activity (i, j), then $TF(i, j)$ can be expressed in terms LT(j) and ET(i). Activity (i, j) begins at node i. The Total Float is calculated by the following formula:

$$\boldsymbol{TF(i,j) = LT(j) - ET(i) - t_{ij}}$$

Find the $TF(i,j)$ for example above ?

Activity B: $TF(1,2) = LT\ (2) - ET(1) - 9 = 0$

Activity A: $TF(1,3) = LT\ (3) - ET(1) - 6 = 3$

Activity D: $TF(3,4) = LT\ (4) - ET(3) - 7 = 0$

Activity C: $TF(3,5) = LT\ (5) - ET(3) - 8 = 9$

Activity E: $TF(4,5) = LT\ (5) - ET(4) - 10 = 0$

Activity F: $TF(5,6) = LT\ (6) - ET(5) - 12 = 0$

Dummy Activity: $TF(2,3) = LT\ (3) - ET(2) - 0 = 0$

Note: If an activity has a **total float of zero**, any delay in the start of the activity (or duration of the activity) will be delay the completion of the project.

Such activity is called **critical activity**. In fact, increasing the duration of an activity by Δ days will increase the length of the project by Δ days.

ملاحظة: إذا كان النشاط يملك وقت عائم صفر ، فإن أي تأخير في بدء النشاط (أو مدة النشاط) سيؤدي إلى تأخير استكمال المشروع .يسمى هذا النشاط بالنشاط الحرج. في الواقع، زيادة مدة النشاط بمقدار Δ يوم سيزيد من طول المشروع بمقدار Δ يوم.

Free Float (FF) is calculated by the following formula:

$$\boldsymbol{FF(i,j) = ET(j) - ET(i) - t_{ij}}$$

Free Float of the activity corresponding to the arc (i, j), denoted by FF(i, j), is the amount by which the starting time of the activity corresponding to arc (i, j) (or the duration of the activity) that can be delayed without delaying the start of any later activity beyond its earliest possible starting time.

التعويم الحر للنشاط المقابل للقوس (i, j) ، الذي يشير إليه FF (i, j)، هو مقدار الوقت الذي يقابل بدأ نشاط القوس (i, j) (او مدة النشاط) التي يمكن أن يتأخر دون تأخير بدء أي نشاط لاحق يتجاوز وقت البدء الممكن

Find the $\boldsymbol{FF(i,j)}$ for example above?

Activity B: $FF(1,2) = ET(2) - ET(1) - t_{12} = 9 - 0 - 9 = 0$

Activity A: $FF(1,3) = 9 - 0 - 6 = 3$

Activity D: $FF(3,4) = 16 - 9 - 7 = 0$

Activity C: $FF(3,5) = 26 - 16 - 8 = 9$

Activity E: $FF(4,5) = 26 - 16 - 10 = 0$

Activity F: $FF(5,6) = 38 - 26 - 12 = 0$

Note: Critical Path is the longest sequence of activity on a project that carries zero free float

Independent Float ($\boldsymbol{IF}$) :
Independent Float is the amount of time that can be delayed without affecting either predecessor or successor activities. And denoted by ($\boldsymbol{IF}$). The Independent Float is calculated by the following formula:

Independent Float for activity (i, j)

$$IF(i,j) = ET(j) - LT(i) - t_{ij}$$

H.W: With the help of the activities given in the table draw a network. Determine its earliest occurrence time, latest occurrence time, critical path, TF, and FF, and IF.

Activity	Duration
1–2	4 days
1–3	12 days
1–4	10 days
2–4	8 days
2–5	6 days
3–6	8 days
4–6	10 days
5–7	10 days
6–7	0 days
6–8	8 days
7–8	10 days
8–9	6 days

References:

1- Hamdy A. Taha, "**Operations Research: An Introduction**", Pearson Prentice Hall, Eighth Edition, 2007.

2- Wayne L. Winston, Operations Research Applications and Algorithms, 1991.